Copyright FCI.

FCIconnect.com

PRODUCT NUMBER	PITCH
VPxx85x500J0G	12.70mm

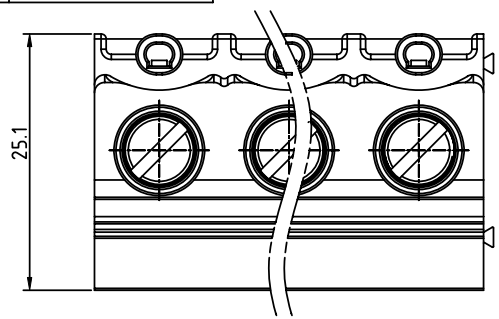

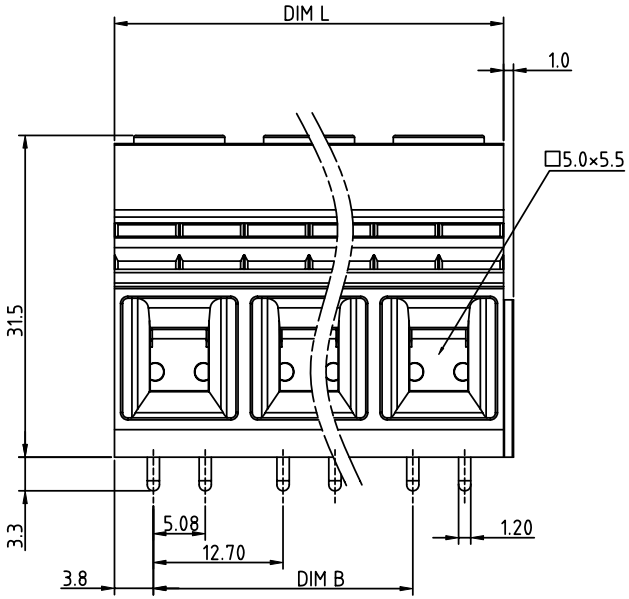

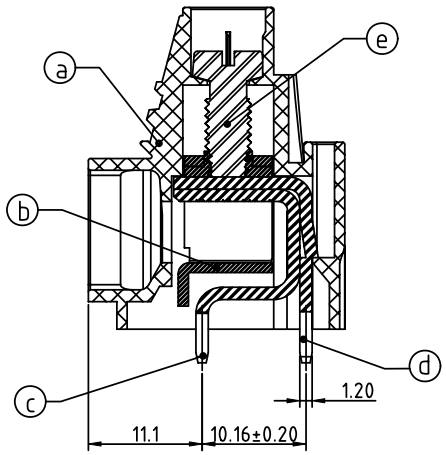

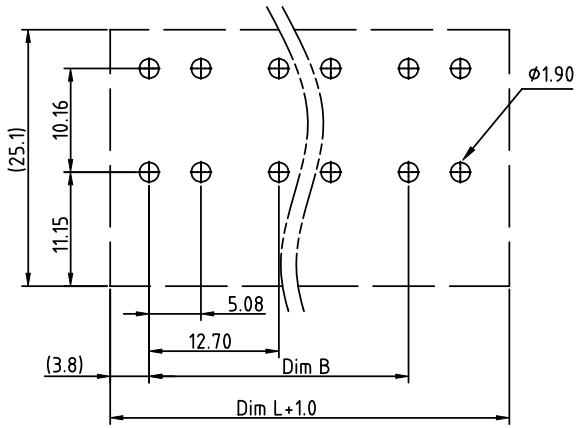

RECOMMENTED P.C.B LAYOUT
TOP VIEW

Material:
- Item ⓐ Terminal housing :Thermoplastic (UL 94V-0)
- Item ⓑ Clamp : Steel stamping , Zinc plated
- Item ⓒ Solder pin1: Copper ,Tin plated
- Item ⓓ Solder pin2: Copper ,Tin plated
- Item ⓔ Terminal screw: Steel Zinc plating"-"slot type

Electrical cULs/IEC
- Voltage rating : 300V / 1000V
- Current rating : 65A / 76A
- Wire range :
- Solid wire (AWG) : 6-20 / 16.00mm²
- Stranded wire (AWG) : 6-20 / 16.00mm²
- Torque : 19Lb-In / 1.2N.m
- Screw : M4.5
- Wire strip length : 10-11mm
- Withstanding voltage : 1.6KV 6KV
- Operating temperature : -40°C+115°C
- Soldering temperature : 260°C+5°C/5 Sec
- Safety Approval : c UL us

PART NO.: VP xx 8 5 x 5 00J0 G

N = Number of poles

Dim L=N×12.70
Dim B=(N-1)×12.70

POLES	Tolerance
2P-5P	±0.20
6P-9P	±0.30
10P-12P	±0.40

End Stackable
No. of poles
02 2 poles
03 3 poles
... ...
12 12 poles

Body Color
0 Black (RAL9005)
2 Red (RAL3001/D)
3 Orange(RAL2011/P)
4 Yellow(RAL1018/A)
5 Green(RAL6018/T)
6 Blue (RAL5015/A)
8 Grey(RAL7035/D)
9 White(RAL1102)
C Green(RAL6018/U)

RoHS compliant
(lead<4%)
In copper Alloy

mat'l. code				surface ASME Y14.5	tolerance ASME Y14.5	projection	product family TERMINAL BLOCK
ltr	ecn no	dr	date	tolerances unless otherwise specified			title
				angles / linear	X.±0.5	MM [INCH]	TERMINAL BLOCK
					X.X±0.3		RISING CLAMP,DOUBLE TAIL TYPE
				X°±1°	X.XX±0.1	scale	
				dr	EVIN ZHONG 041414	FCI	dwg no VPxx85x500J0G sheet 1 of 1 size A4
				engr	EVIN ZHONG 041414		
				chr	HANKE FENG 041414		
				appd	SHI JUN 041414		type CUSTOMER Drawing
sheet index	revision	A					
	sheet	1					